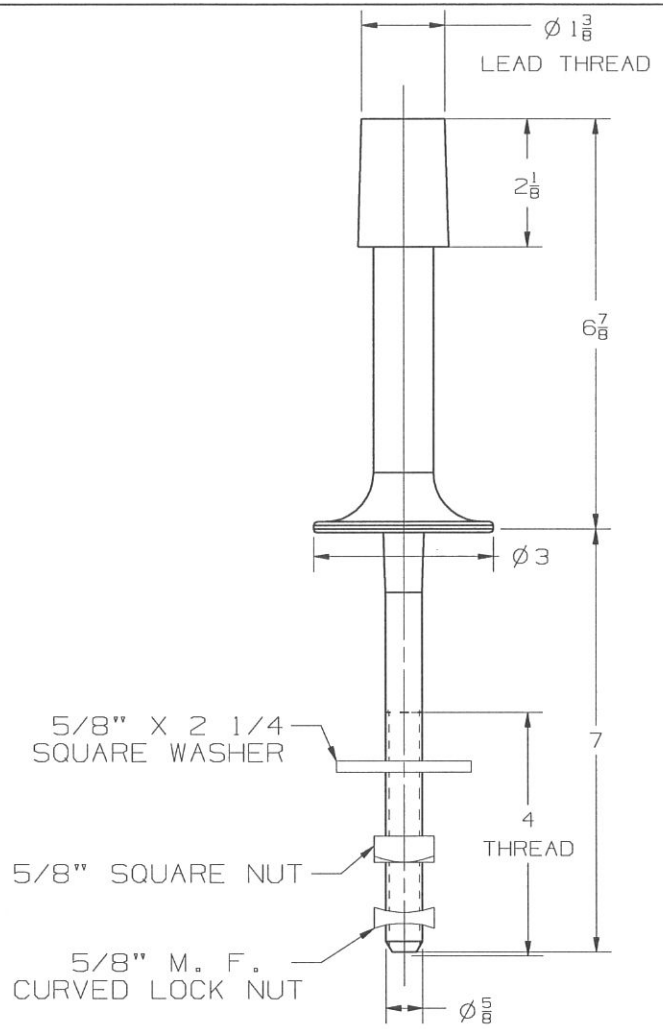

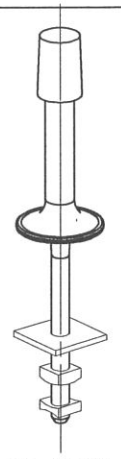

3D VIEW

-NOTES-

1. MAT'L: AISI C1050 H.R. STEEL.
2. FINISH: HOT DIP GALVANIZE PER ASTM A153 (LATEST REV).

CATALOG NUMBER: 4717

LATEST EC NO:	REV.	DATE	CHANGED BY	RESP ENGINEER
---	-	---------	---	---

DO NOT SCALE THIS DWG

THIRD ANGLE PROJECTION

ISO DUAL DIMENSIONS IN=INCH, MM=MILLIMETER

DRN BY:	DATE	TITLE:	SIZE
BERGER	09-12-12	FORGED STEEL PIN	B

HUBBELL POWER SYSTEMS® CHANCE®

CAE CAD CAM

DWG NO: SA4717

CONFIDENTIAL: THIS DRAWING AND ITS CONTENTS ARE CONFIDENTIAL AND THE EXCLUSIVE PROPERTY OF HUBBELL POWER SYSTEMS, INC. NO PUBLICATION, DISTRIBUTION OR COPIES MAY BE MADE WITHOUT WRITTEN CONSENT BY HUBBELL POWER SYSTEMS, INC.
© 2012 HUBBELL POWER SYSTEMS. UNPUBLISHED, ALL RIGHTS RESERVED UNDER THE COPYRIGHT LAWS